NAGA

MODICA 106

BACK-TO-WALL TOILET SUITE

PRODUCT CODE: BL-106N-TPT

FEATURES:

- Gloss white finish
- Vortex flush
- Antibacterial Glazed Pipe
- Available in UF and PP soft close seat
- WELS 4 Star rated, 4.5L/3L (3.5L average flush)
- Universal installation – Back or bottom entry
- P-Trap: 180mm
- S-Trap: PWG001: 43-149mm
- S-Trap: PWG002: 98-208mm(Optional Extra)
- S-Trap: PWG003: 155-259mm(Optional Extra)

WARRANTIES:

Ceramics:	15 Years/ 1-year Labour
Internal System(Valves):	1 Year/ 1-year Labour
Parts:	1 Year/ 1-year Labour

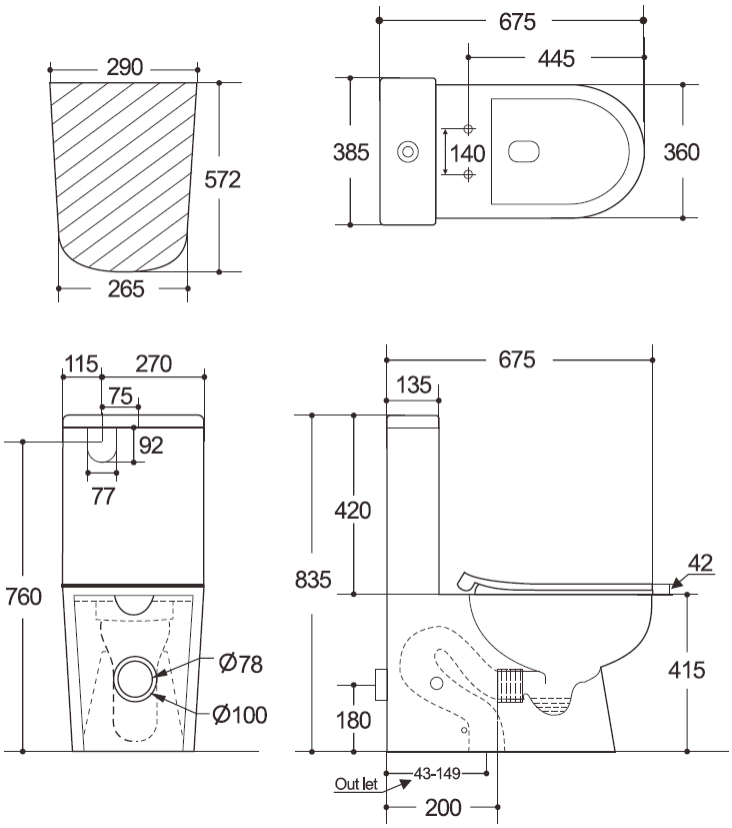

CLEANING AND CARE:

- The seat and cover should be cleaned using warm soapy water
- Clean only with a soft cloth or sponge using warm water and mild soap or detergent.
- Do not use any abrasive cleaning materials.

WaterMark
4.5/3L
AS1172.1/2
LN:WMK26157

The more stars the more water efficient
WATER RATING
www.waterrating.gov.au
3.5 litres average flush
4.5 L per full flush / 3 L per half flush
In accordance with AS/NZS 6400
Licence No.1647
Guangdong Binli Bathroom Co., Ltd

All measurements are in millimeters and subject to change without notice. For ceramic products, please allow +/- 5mm tolerance for manufacturing variance. Updated: 01/01/2024